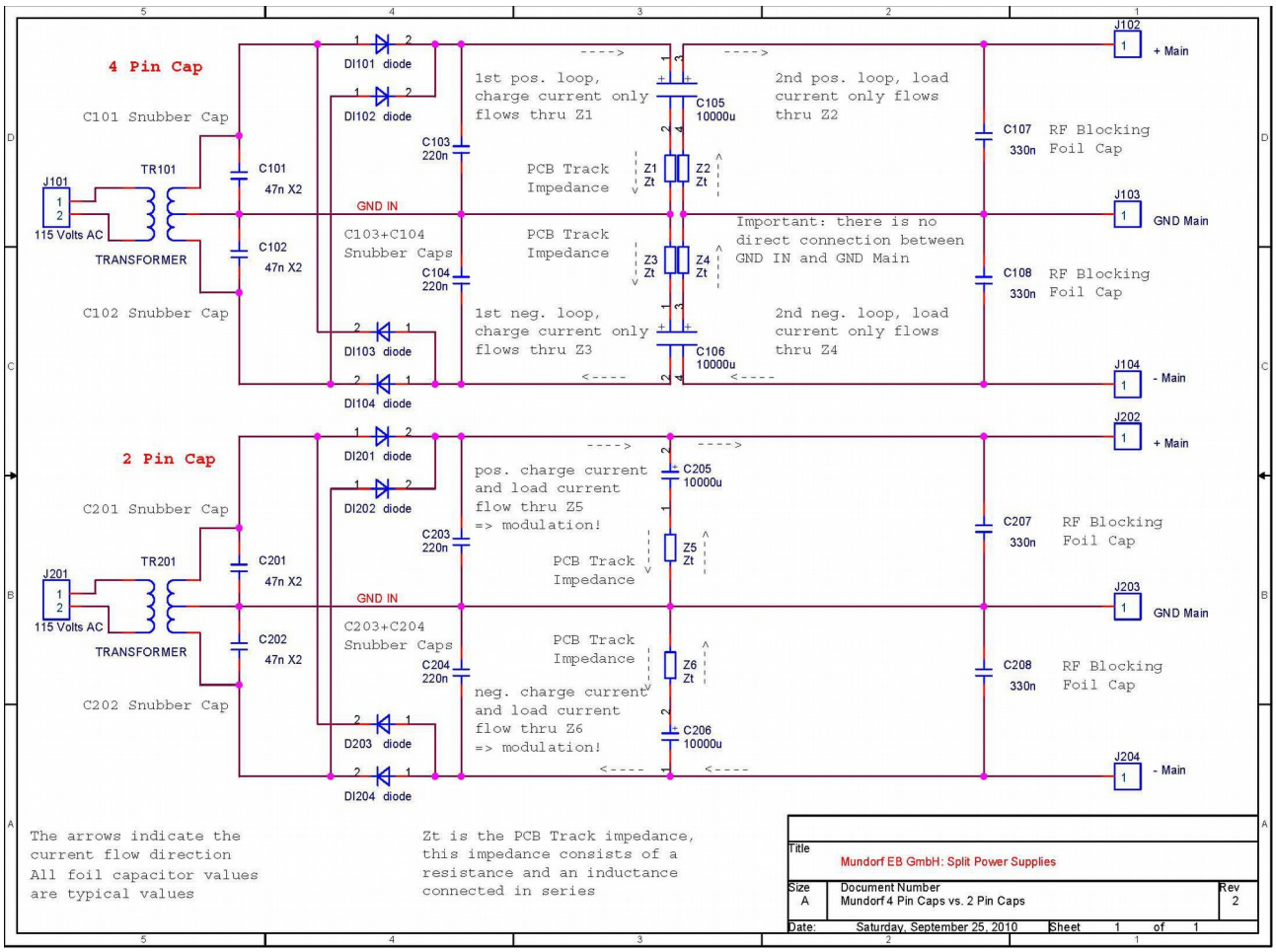
4 Pin Cap
C101 Snubber Cap
C102 Snubber Cap
J101
115 Volts AC
TR101
TRANSFORMER
C101
47n X2
C102
47n X2
GND IN
DI101 diode
DI102 diode
DI103 diode
DI104 diode
C103
220n
C104
220n
C103+C104
Snubber Caps
1st pos. loop,
charge current only
flows thru Z1
PCB Track
Impedance
Z1
Zt
Z2
Zt
C105
10000u
2nd pos. loop, load
current only flows
thru Z2
Z3
Zt
Z4
Zt
C106
10000u
1st neg. loop,
charge current only
flows thru Z3
2nd neg. loop, load
current only flows
thru Z4
Important: there is no
direct connection between
GND IN and GND Main
C107
330n
RF Blocking
Foil Cap
C108
330n
RF Blocking
Foil Cap
J102
+ Main
J103
GND Main
J104
- Main
2 Pin Cap
C201 Snubber Cap
C202 Snubber Cap
J201
115 Volts AC
TR201
TRANSFORMER
C201
47n X2
C202
47n X2
GND IN
DI201 diode
DI202 diode
D203 diode
DI204 diode
C203
220n
C204
220n
C203+C204
Snubber Caps
pos. charge current
and load current
flow thru Z5
=> modulation!
PCB Track
Impedance
Z5
Zt
C205
10000u
Z6
Zt
C206
10000u
neg. charge current
and load current
flow thru Z6
=> modulation!
C207
330n
RF Blocking
Foil Cap
C208
330n
RF Blocking
Foil Cap
J202
+ Main
J203
GND Main
J204
- Main
The arrows indicate the
current flow direction
All foil capacitor values
are typical values
Zt is the PCB Track impedance,
this impedance consists of a
resistance and an inductance
connected in series
Title
Mundorf EB GmbH: Split Power Supplies
Size
A
Document Number
Mundorf 4 Pin Caps vs. 2 Pin Caps
Rev
2
Date:
Saturday, September 25, 2010
Sheet
1
of
1